30	Switch	
31	Switch plate	(Car. 1363)
32	Instrument panel left-hand trim	
33	Switch	
34	Instrument panel	Instrument panel: Removal - Refitting
35	Instrument panel upper screws	
36	Left-hand dashboard side panel	
37	Dashboard air vent	

Repair-50x08x02x01-02x50-1-4-1.xml

XSL version : 3.02 du 22/07/11

mcx30.com

DASHBOARD CROSS MEMBER: REMOVAL - REFITTING

Location and specifications (tightening torques, parts always to be replaced, etc.)Dashboard assembly: Exploded view .

REMOVAL

1. REMOVAL PREPARATION OPERATION

- Disconnect the battery Battery: Removal - Refitting .

- Remove:
  - the front door seals Interior body side trim assembly: Exploded view ,
  - the front door Front opening element: Removal - Refitting ,
  - the windscreen pillar trims Interior body side trim assembly: Exploded view ,
  - the right-hand dashboard side panel Dashboard assembly: Exploded view ,
  - the glovebox Dashboard assembly: Exploded view ,
  - the airbag inhibitor switch Passenger compartment switches : List and location of components ,
  - the centre console Centre console: Removal - Refitting ,
  - the card reader Immobiliser system: List and location of components ,

- Remove:
  - the centre front panel Dashboard assembly: Exploded view ,
  - the air conditioning control panel Dashboard assembly: Exploded view ,
  - the multimedia network interface unit Navigation: List and location of components .

- Remove:
  - the dashboard lower trim Dashboard assembly: Exploded view ,

mcx30.com

- the passenger compartment central unitUCH: Removal - Refitting UCH: Removal - Refitting ,
- the driver's front airbagDriver's frontal airbag: Removal - Refitting ,
- the steering wheelSteering assembly: Exploded view ,
- the shells under steering wheelDashboard assembly: Exploded view ,
- the steering column switch assemblyControl - Signals: List and location of components ,
- the left-hand dashboard side panelDashboard assembly: Exploded view ,
- the instrument panel visor trimDashboard assembly: Exploded view ,
- the instrument panel trimDashboard assembly: Exploded view ,
- the instrument panelDashboard assembly: Exploded view ,
- the tweeters from the upper section of the dashboardDashboard assembly: Exploded view ,
- the dashboard screwsDashboard assembly: Exploded view
- the dashboard (this operation requires two people).

mcx30.com

2. REMOVAL OPERATION

- Remove the dashboard wiringDashboard wiring: Removal - Refitting .

- Unclip on the dashboard cross memberAir distribution circuit assembly: Exploded view :
  - the front side air distribution duct,
  - the front air inlet duct.

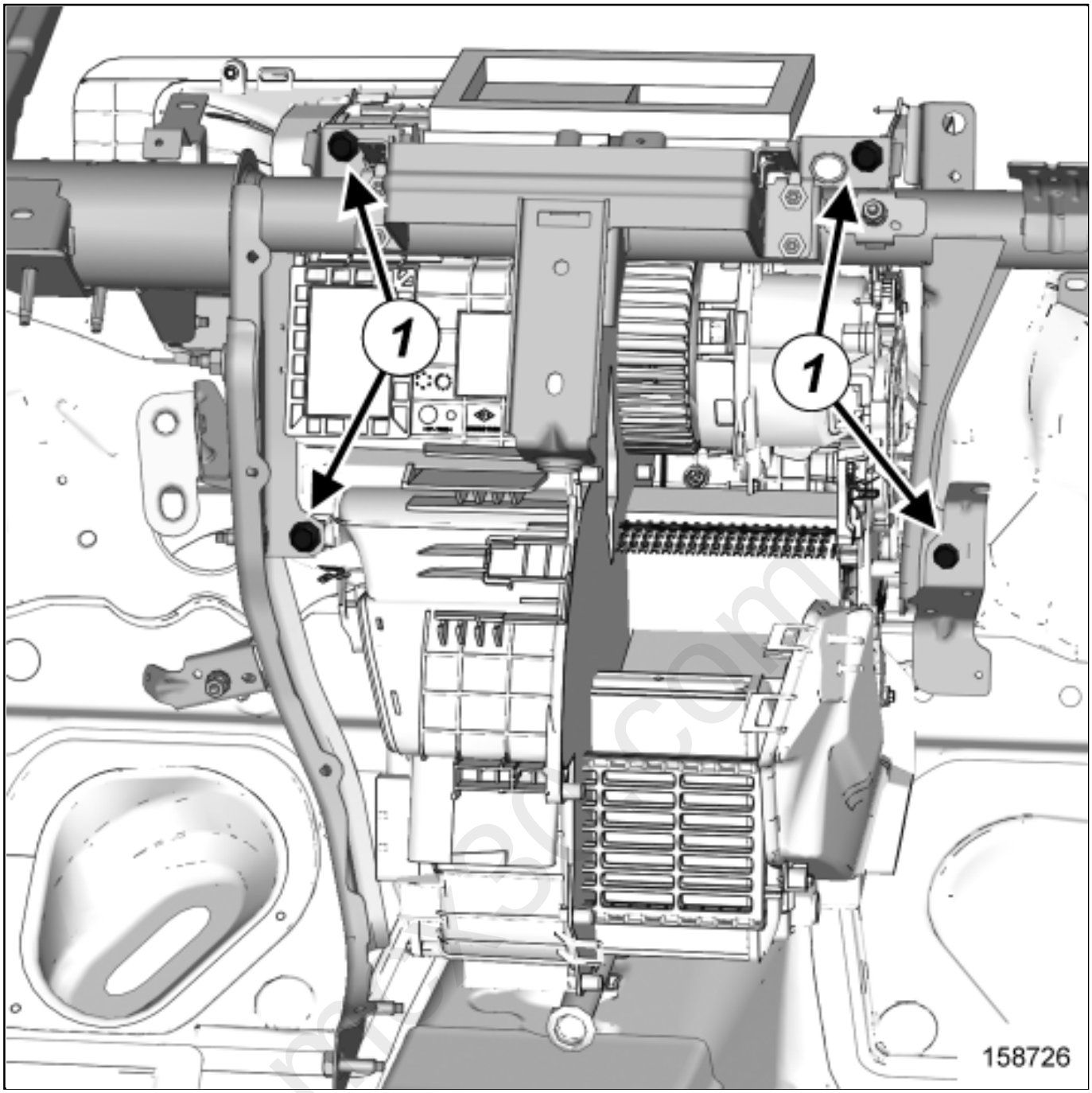

- Remove the bolts(1) .

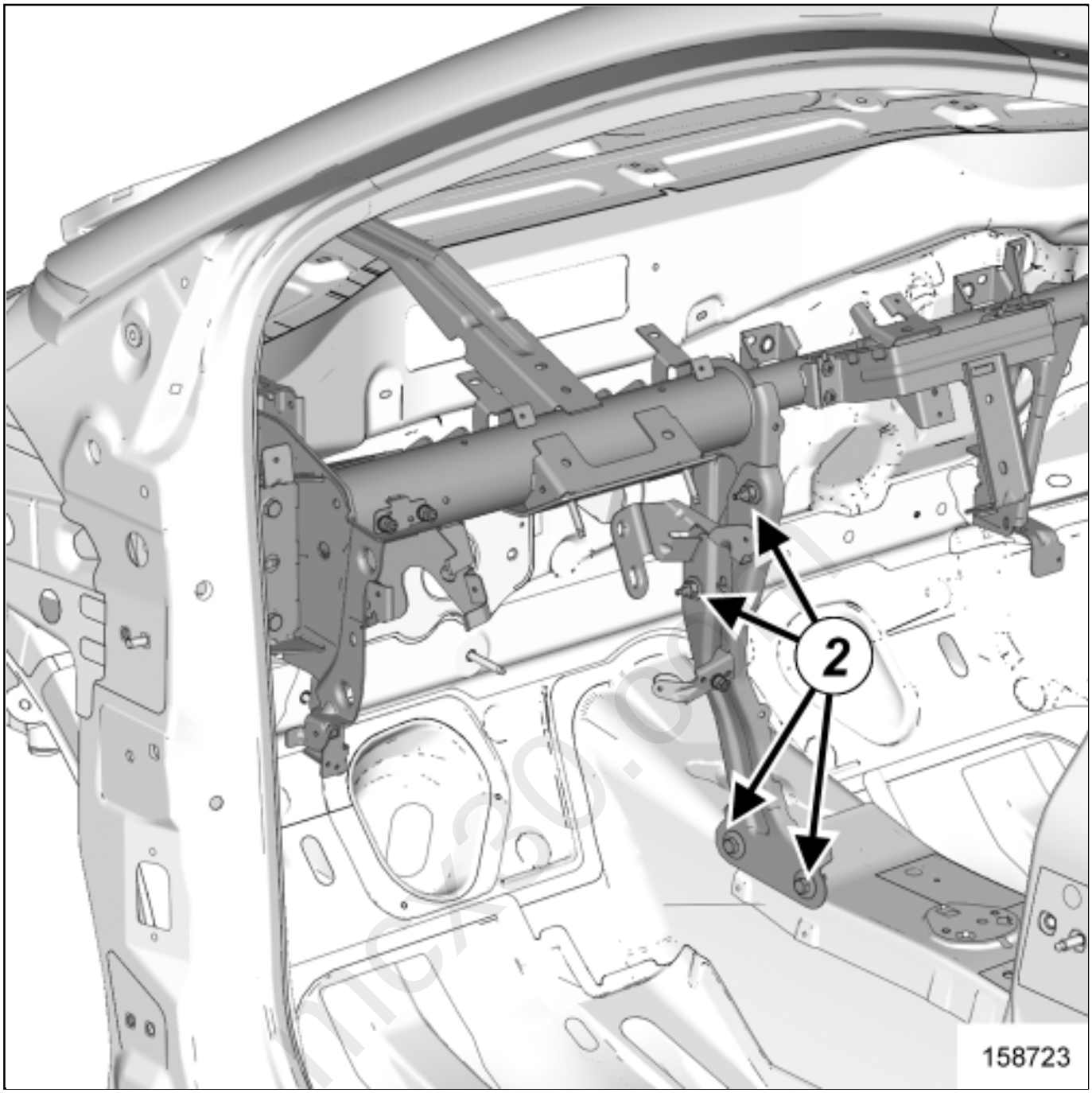

Remove:

- the dasboard flange bolts(2) ,
- the dashboard flange.

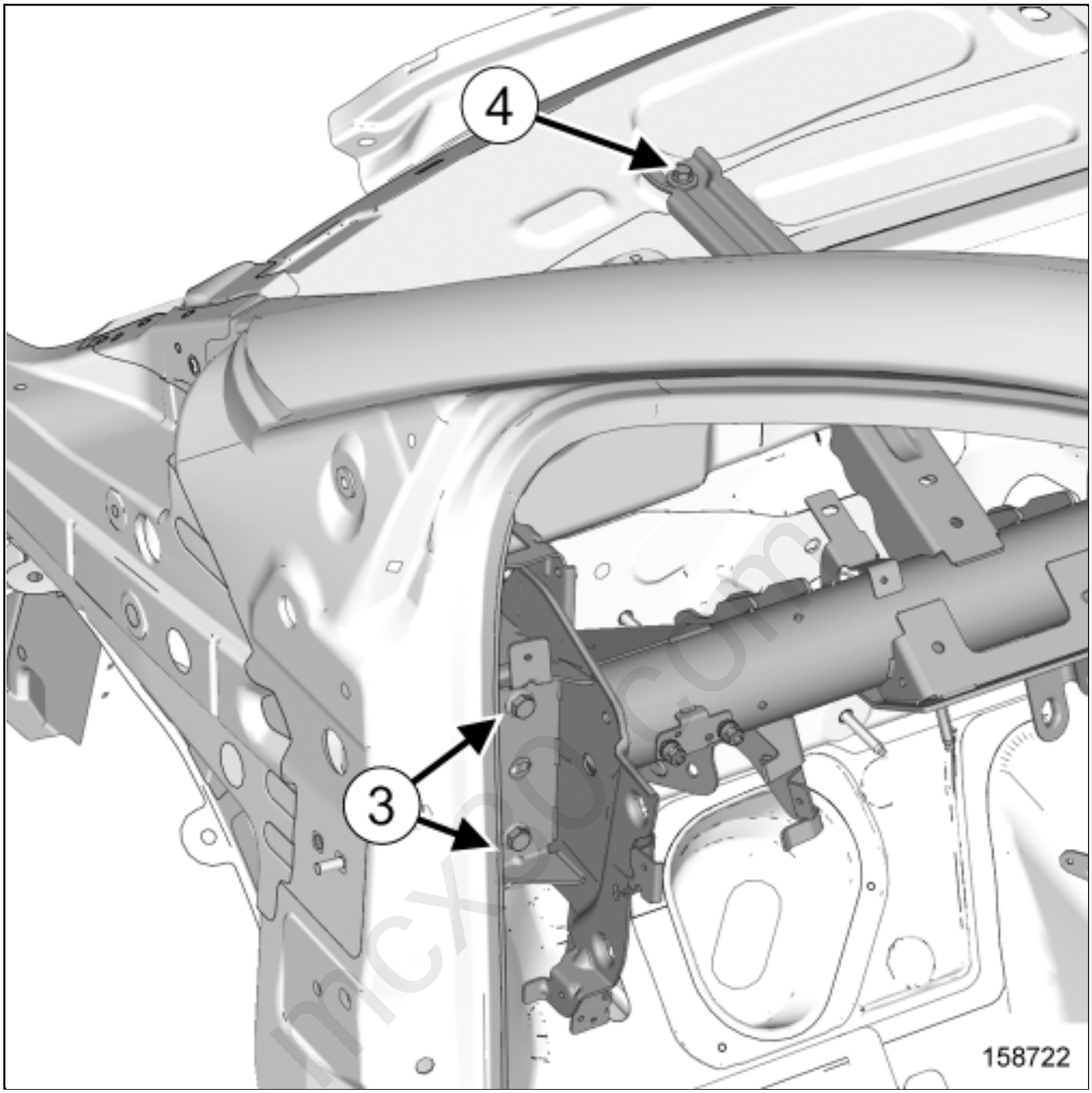

Remove:

- the bolt from the windscreen aperture cross member(4) ,
- the bolts from the cross member on each side(3) .

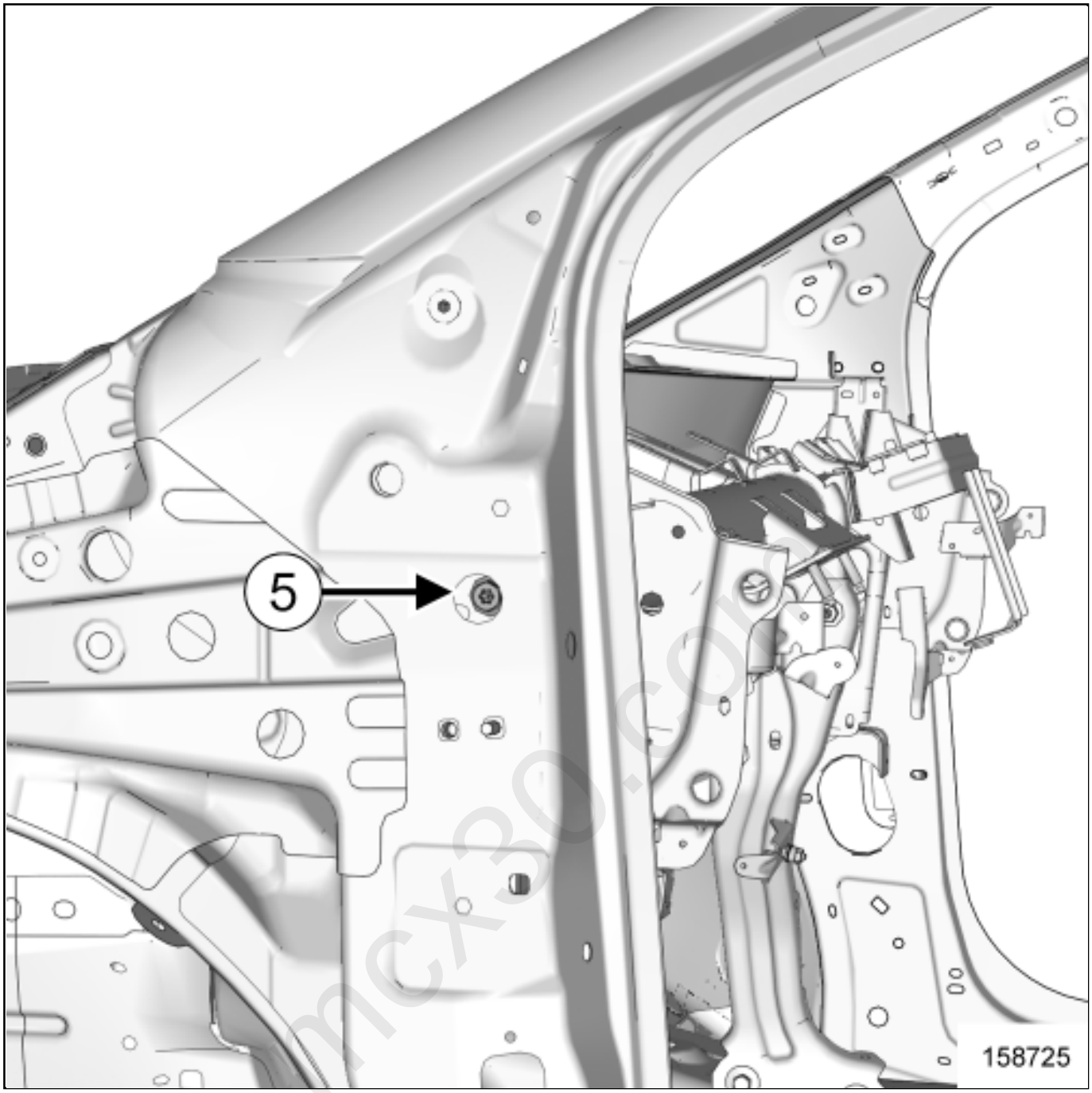

Remove:

- the side bolts(5) ,
- the dashboard cross member (this operation requires two people).